GT-LE910C4-EU

Product description

Rev. 19 – 07/2020

Contents

1. Overview 3

2. Hardware Interface Description 3

2.1 Main features of the GT-LE910C4-EU 3

2.2 Hardware block diagram 4

3. Interface description 5

3.1 Molex 4 pin connector – Power connector 5

3.1.1 Power Supply 5

3.1.2 Supply voltage requirements 6

3.2 USB CONNECTOR 6

3.3 SMA CONNECTOR 6

3.4 SIM DRAWER 6

3.5 RS-232 Interface 7

3.6 AUX Interface 8

3.7 Status LED 9

3.7.1 Red LED 9

3.7.2 Green LED 9

5. Mechanical Characteristics 10

5.1 General mechanical description 10

5.2 Environmental requirements 10

5.3 Protection class 10

5.4 RoHS compliance 10

6. SAFETY RECOMMANDATIONS 11

1. Overview

The GT-LE910C4-EU is a complete Cellular Terminal solution for GPRS/UMTS/LTE.
Based on Telit LE910C4-EU modem.

2. Hardware Interface Description

2.1 Main features of the GT-LE910C4-EU

Feature	Implementation
Incorporates Telit LE910C4-EU module	The Telit module handles all GPRS/UMTS/LTE
OPTION: PIC16F1824 Microcontroller	For Modem ON/OFF and Watchdog
Frequency bands	4G bands: B1, B3, B7, B8, B20, B28A 3G bands: B1, B3, B8 2G bands: B3, B8
Power supply	Single supply voltage 6V DC to 55V DC connector 4 pin micro-fit 3mm
ADC and GPIO inputs	Two outputs optocouplers open collector drive 100ma Two inputs optocouplers, 0-55v One ADC 10 bit, 0-55V connector 6 pin micro-fit 3mm
Communication	Modem Full RS232, connector D-Type 9pin (DB-9) Modem USB, Connector USB Type B
Antennas	GPRS/UMTS/LTE via SMA connector GNSS via SMA connector

2.2 Hardware block diagram

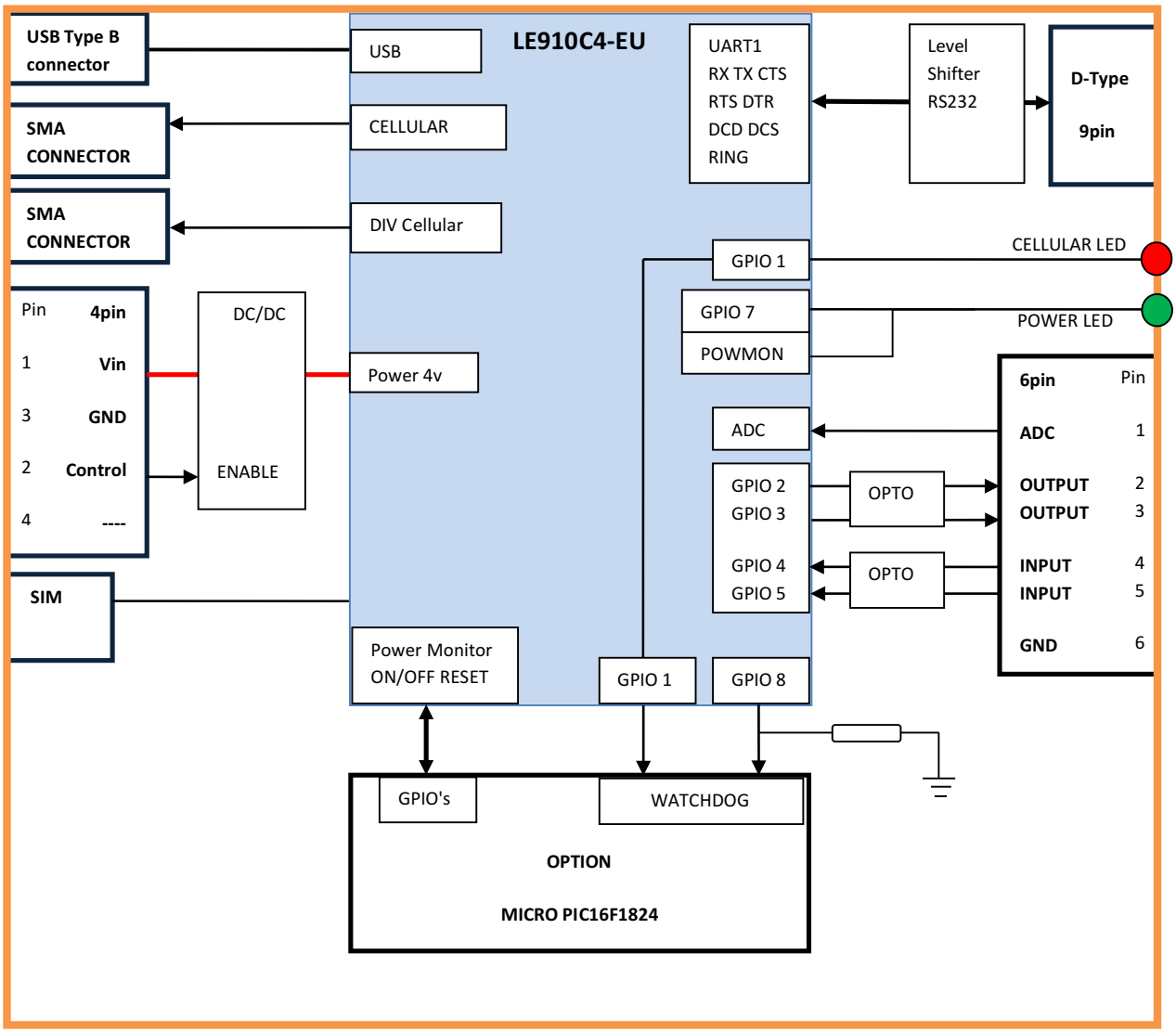

3. Interface description

3.1 Molex 4 pin connector – Power connector

3.1.1 Power Supply

The GT-LE910C4-EU Terminal requires a single voltage source of POWER 6V-55V capable of providing a peak during an active transmission. The GT-LE910C4-EU Terminal is protected against supply voltage reversal. An internal fuse 1.1A 60V ensures an electrical safety according to EN60950-1. This fuse is not removable. A fast blow fuse of 0.8A is necessary for 24V power supply system (for vehicles).

The power supply recommended being any safety approved power supply certified IEC 60950-1 or EN 60950-1 or UL 60950-1 with limited output current up to 2A. The type of the receptacle assembled on the GT-LE910C4-EU Terminal is 4 pin Micro Mate-N-LOK 3mm (0.11 inch) from MOLEX.

Pin	Signal name	Use
1	POWER	Input Power supply range 6-55V
2	Power Enable	Control pin to turn ON/OFF Terminal power. When putting this pin to voltage >6V the unit will be turn OFF. When putting this pin OPEN or GND the unit will be turn ON.
3	GND	Ground
4		Not connected

Pin assignment of the power plug including power supply and Power Enable

Male 4-pole plug for power supply
To use with MOLEX MICRO FIT 3mm
PART NUMBER 43025-0400

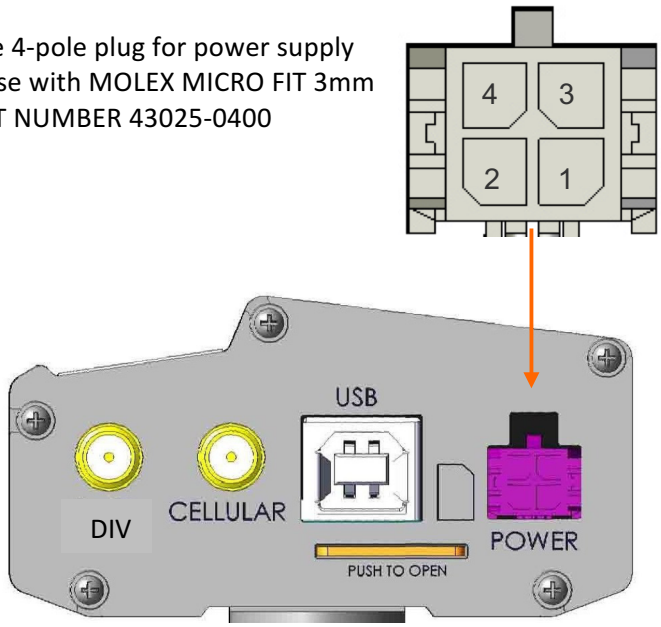

Pin assignment

1 – Power

2 – Power Enable

3 – GND

4 – NC

3.1.2 Supply voltage requirements

The DC power supply must be connected to the POWER input:

- Input voltage range 6 - 55V DC
- Nominal Voltage 12V DC
- Power Supply current rating: max. 2A @12V
- Power Supply ripple: max. 120mV
- Input current in idle mode: 20mA @ 12V
- Input average current in communication mode: 100mA @ 12V

3.2 USB CONNECTOR

The USB CONNECTOR of the GT-LE910C4-EU Terminal is USB TYPE B.

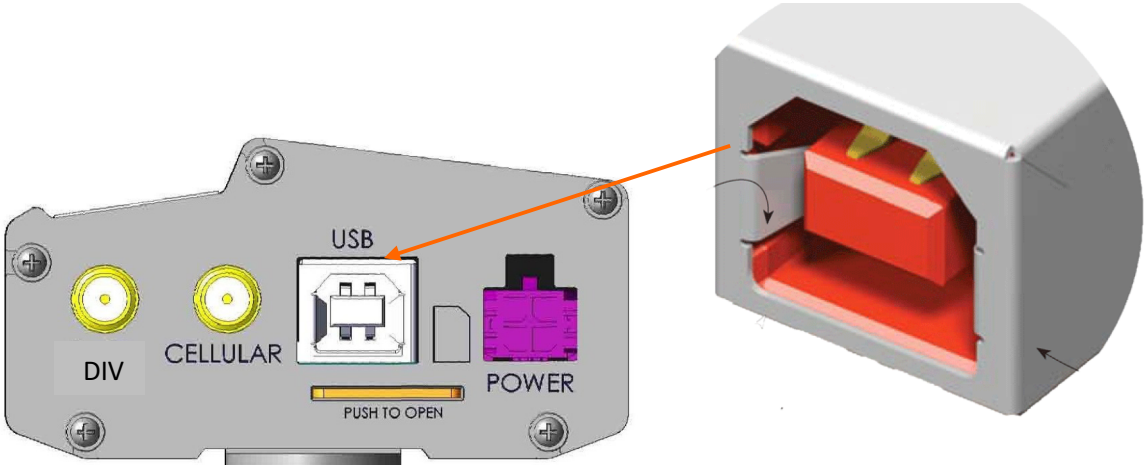

3.3 SMA CONNECTOR

The GT-LE910C4-EU Terminal uses SMA CONNECTORS for ANTENNAS.
For CELLULAR ANTTENA and DIV ANTENNA use the 6 band ANTENNA with 3.5dB gain.

3.4 SIM DRAWER

Please insert the SIM card on the following direction into the SIM push-push.

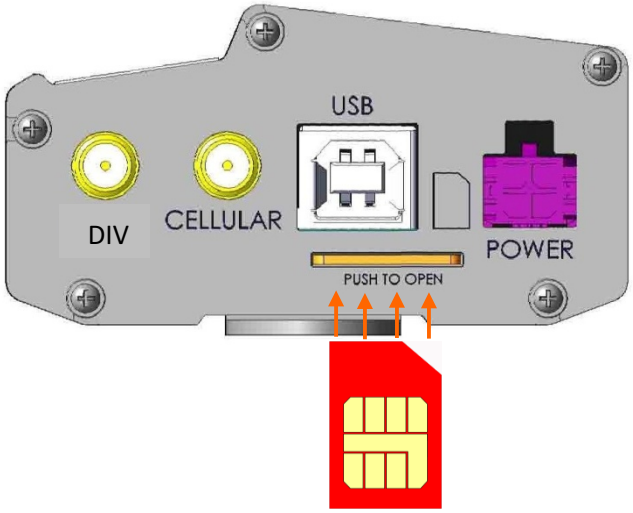

3.5 RS-232 Interface

The serial interface of the GT-LE910C4-EU is intended for the communication between the GPRS/UMTS/LTE module and the host application. This RS-232 interface is a data and control interface for transmitting data. It accepts, AT commands and provides multiplexed channels. EMC immunity complies with the vehicular environment requirements according to EN301-489-7.

The user interface of the GT-LE910C4-EU is accessible from a Data Terminal Equipment DTE connected to the RS232 interface and it is managed by AT commands according to the GPRS/UMTS/LTE specification. The supported commands are listed in the AT Commands Reference Guide.

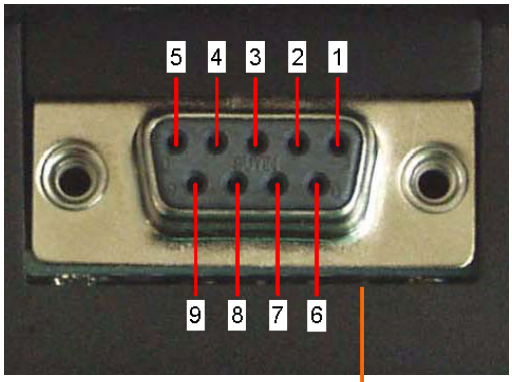

Pin assignment RS-232

Pin no.	Signal name	I/O	Function of application
1	DCD	O	Data Carrier Detected
2	RXD	O	Receive Data
3	TXD	I	Transmit Data
4	DTR	I	Data Terminal Ready
5	GND	-	Ground
6	DSR	O	Data Set Ready
7	RTS	I	Request To Send
8	CTS	O	Clear To Send
9	RING	O	Ring Indication

D-Type 9 pin female RS232

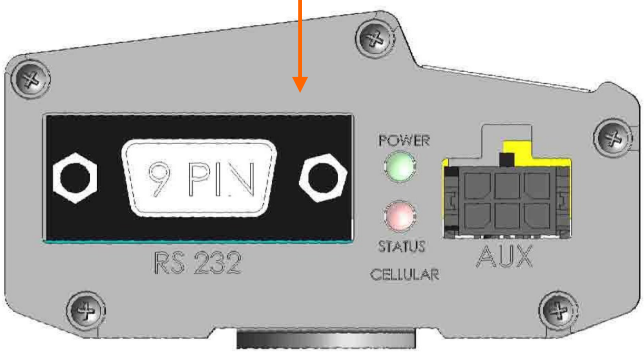

Connector type on the terminal is:

- RS-232 through D-Type 9-pin female
- Baud rate from 300 to 230,400 bit/s
- Short circuit (to Ground) protection on all outputs.
- Input voltage range: -12V to +12V

3.6 AUX Interface

The AUX interface provides via Male 6-pole plug connector, the following options:

- 2 digital inputs optocouplers, input 0-55vdc.
- 2 outputs optocouplers, drive up to 100ma, external diode needed when driving a relay.
- 1 ADC (10 bit) input 0-55v.
- 1 Ground pin.

Pin assignment

1. **ADC**
2. **GPIO 2 -- OUTPUT**
3. **GPIO 3 -- OUTPUT**
4. **GPIO 4 -- INPUT**
5. **GPIO 5 -- INPUT**
6. **GND**

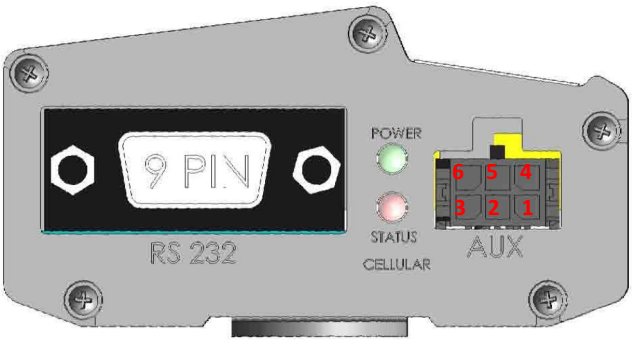

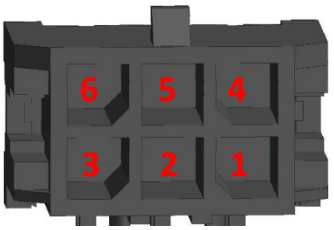

Male 6-pole plug.
To use with MOLEX MICRO FIT
PART NUMBER 43025-0600.

Pin #	Color
1	Red
2	White
3	Green
4	Blue
5	Yellow
6	Black

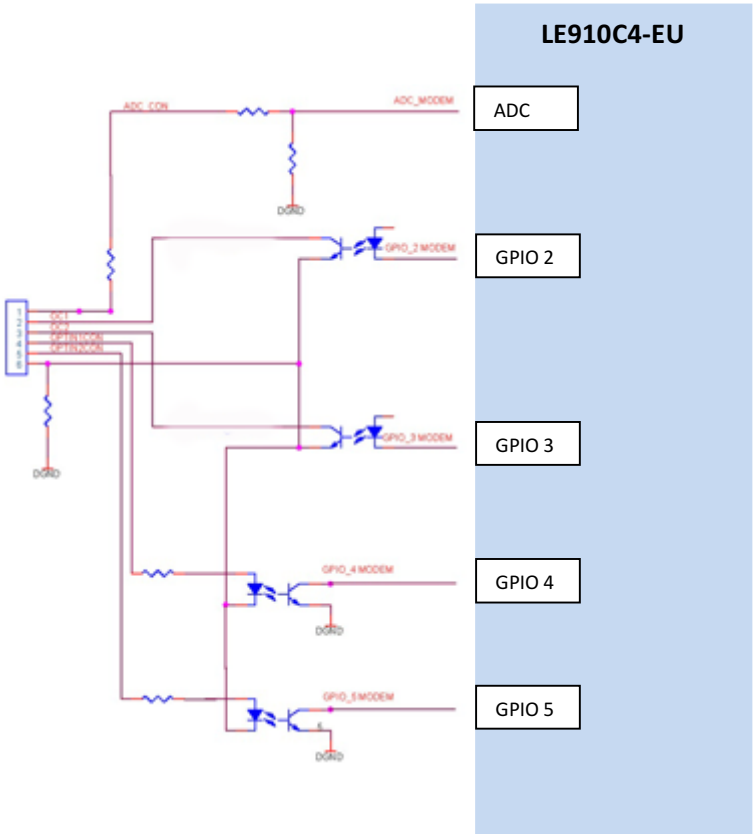

3.7 Status LED

3.7.1 Red LED

The Red LED is connected to GPIO1, OFF by default.

Red LED status	Device Status
permanently on	a call is active
fast interrupt sequence (period 0,5s, Ton 1s)	Net search / Not registered
slow interrupt sequence (period 0,3s, Ton 3s)	Registered full service
permanently off	device off

The LED can use for Network status or controlled by the user.

To activate GSM status Red LED "AT#GPIO=1,0,2;#SLED=2,1,1"

Red LED ON: "AT#GPIO=1,1,1"

Red LED OFF: "AT#GPIO=1,0,1"

3.7.2 Green LED

The Green LED is connected to GPIO7, ON by default (at power up).

Green LED status	Device Status
permanently ON	Device active
permanently OFF	device off

Green LED control:

Green LED ON: "AT#GPIO=7,1,1" (Default)

Green LED OFF: "AT#GPIO=7,0,1"

5. Mechanical Characteristics

5.1 General mechanical description

Weight	180g (6.35oz)
Dimensions (max) L x W x H	83mm x 64mm x 34mm
Case material	Aluminum

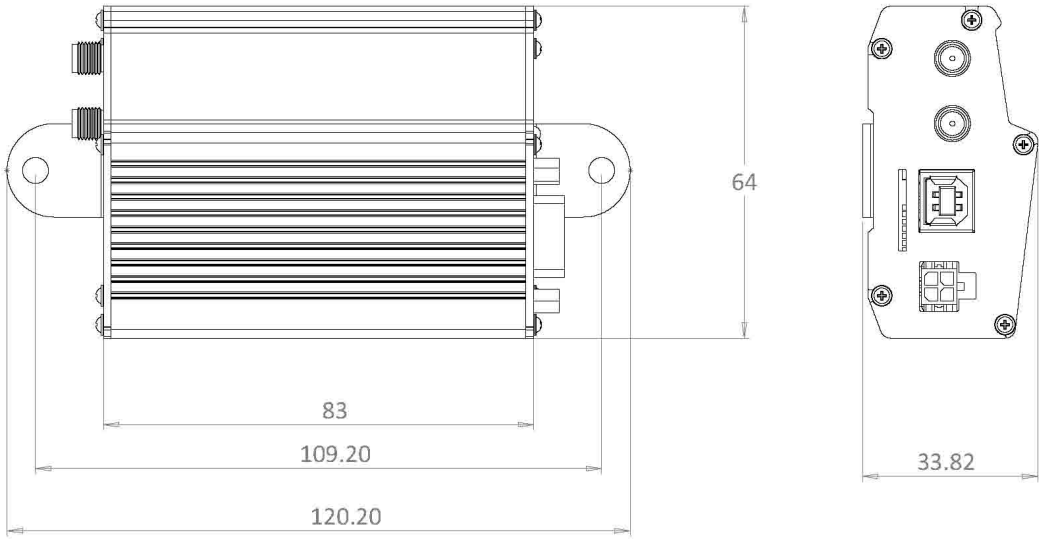

5.2 Environmental requirements

Operating temperature range	-40°C to +85°C	The module is fully functional (*) in all the temperature range.
Humidity	5% - 95%	

(*)Functional: the module is able to make and receive data calls and SMS.

5.3 Protection class

IP40 Avoid exposing the Terminal to liquid or moisture.

5.4 RoHS compliance

All hardware components are fully compliant with the EU RoHS and WEEE Directives.

6. SAFETY RECOMMANDATIONS

READ CAREFULLY

1. The unit does not provide protection from lightning and surge. For outdoor installation use outdoor nonmetallic case safety approved according UL 50. Additionally you should provide protection from lightning and over voltage according National code.

2. Be sure the use of this product is allowed in the country and in the environment required. The use of this product may be dangerous and has to be avoided in the following areas: Where it can interfere with other electronic devices in environments such as hospitals, airports, aircrafts, etc. Where there is risk of explosion such as gasoline stations, oil refineries, etc. It is responsibility of the user to enforce the country regulation and the specific environment regulation. Do not disassemble the product; any mark of tampering will compromise the warranty validity. We recommend following the instructions of the hardware user guides for a correct wiring of the product. The product has to be supplied with a stabilized voltage source and the wiring has to be conforming to the security and fire prevention regulations. The product has to be handled with care, avoiding any contact with the pins because electrostatic discharges may damage the product itself. Same cautions have to be taken for the SIM, checking carefully the instruction for its use. Do not insert or remove the SIM when the product is in power saving mode. The system integrator is responsible of the functioning of the final product; therefore, care has to be given to the external components of the unit, as well as of any project or installation issue, because the risk of disturbing the GSM network or external devices or having impact on the security. Should there be any doubt, please refer to the technical documentation and the regulations in force. Every unit has to be equipped with a proper antenna with specific characteristics. The antenna has to be installed with care in order to avoid any interference with other electronic devices and has to guarantee a minimum distance from the body (20 cm/8"). In case this requirement cannot be satisfied, the system integrator should assess the final product against the SAR regulation. The European Community provides some Directives for the electronic equipment introduced on the market. All the relevant information available on the European Community website: http://europa.eu.int/comm/enterprise/rtte/dir99-5.htm The text of the Directive 99/05 regarding telecommunication equipment is available, while the applicable Directives (Low Voltage and EMC) are available at: http://europa.eu.int/comm/enterprise/electr_equipment/index_en.htm